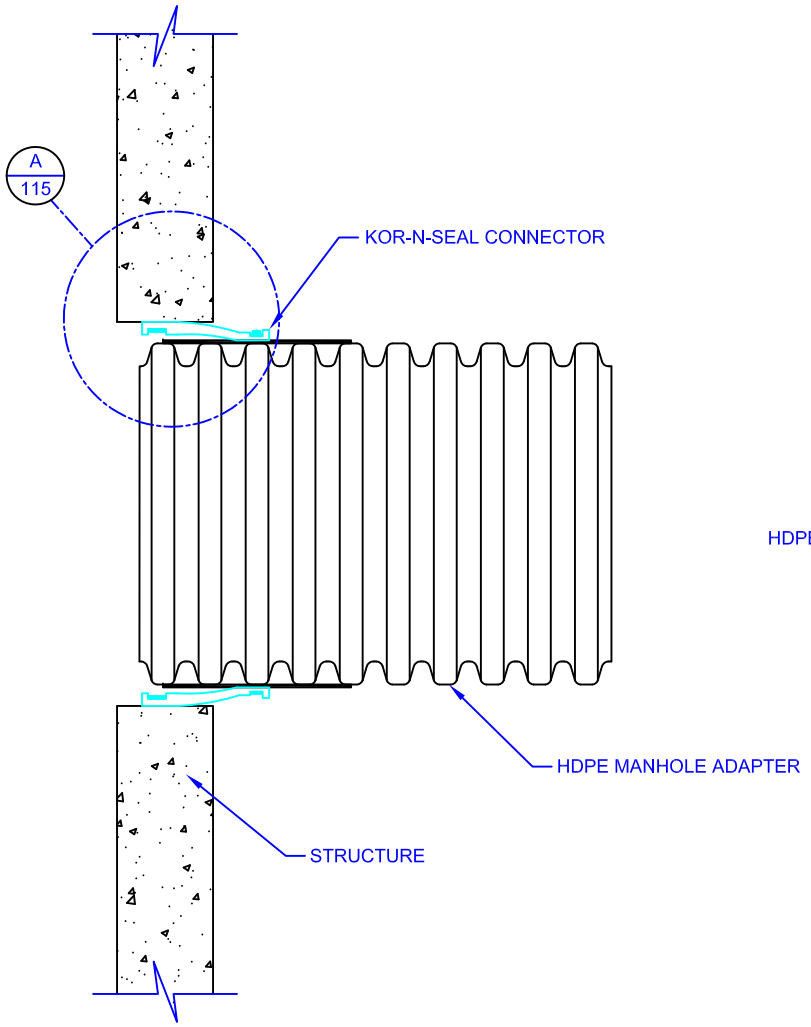


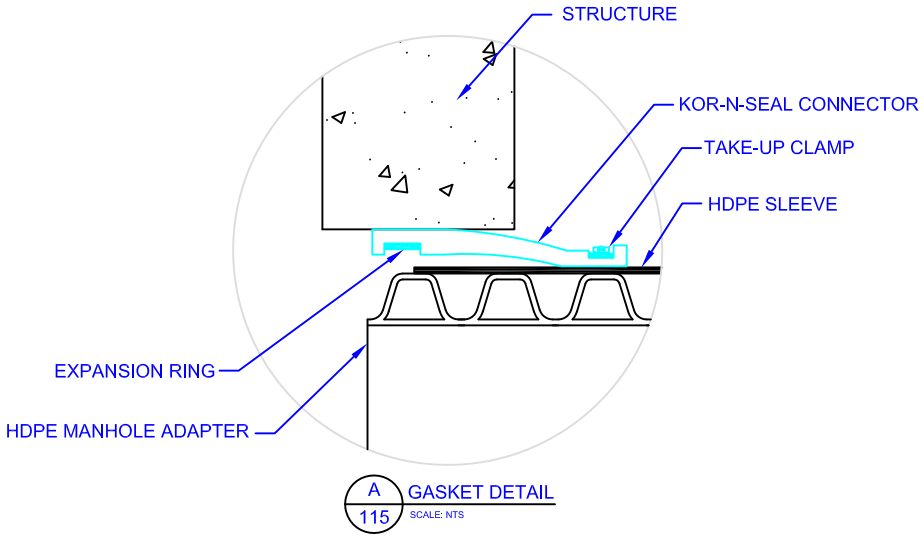


| PIPE SIZE (IN) | MANHOLE ADAPTER OD (IN) | KOR-N-SEAL (PN#) | |
|---|---|---|---|
| | | SERIES 106 OR 206 | SERIES 306 |
| 12 | 14.64 | S106-20BWS | NA |
| 15 | 17.79 | S206-22 | S306-22 |
| 18 | 21.69 | S206-26 | S306-26 |
| 24 | 28.56 | S206-32 | S306-32 |
| 30 | 35.1 | S206-38 | S306-38 |
| 36 | 41.05 | S206-44L | S306-44L |
| 42 | 47.95 | S206-52L | NA |
| 48 | 54.65 | S206-58L | NA |
| 60 | 66.95 | S206-70L | NA |

NOTES:

- ALL PIPE SHALL BE INSTALLED IN ACCORDANCE WITH ASTM D2321 - STANDARD PRACTICE FOR UNDERGROUND INSTALLATION OF FLEXIBLE THERMOPLASTIC SEWER PIPE, LATEST EDITION.
- DUE TO SLIGHT DIFFERENCES IN PRINSCO'S MANUFACTURING EQUIPMENT, 18"-48" DIAMETER PIPE HAS MINOR DIAMETRICAL DIFFERENCES BETWEEN THE WESTCOAST AND THE MIDWEST. DUE TO THESE DIFFERENCES PLEASE VERIFY DIMENSIONS BEFORE ORDERING ANY KOR-N-SEAL PRODUCT.
- SEE KOR-N-SEAL FOR SPECIFIC PRODUCT INFORMATION AND SELECTION.
- KOR-N-SEAL IS A REGISTERED TRADEMARK OF NPC, INC. (WWW. NPC.COM)
- SEE PIPE-STRUCTURE CONNECTION INSTALLATION DETAIL (D-1-109) FOR PROPER BACKFILLING TECHNIQUES NEAR STRUCTURES.

THIS DETAIL DEPICTS RECOMMENDED INSTALLATION PRACTICES AND IS NOT INTENDED TO SUPERSEDE ANY NATIONAL, STATE OR LOCAL SPECIFICATIONS. PRINSCO BEARS NO RESPONSIBILITY FOR ANY ALTERATIONS, REVISION AND/OR DEVIATION FROM THIS STANDARD DETAIL. PRINSCO HAS NOT PERFORMED ANY ENGINEERING OR DESIGN SERVICE FOR THIS PROJECT. THE DESIGN ENGINEER SHALL REVIEW THESE DETAILS PRIOR TO CONSTRUCTION TO VERIFY SUITABILITY. © PRINSCO, INC.

PRINSCO
ENGINEERED WITH INTEGRITY
1717 16TH ST. NE 3RD FLOOR WILLMAR, MN 56201

WT STRUCTURE CONNECTION
HDPE SLEEVE - KOR-N-SEAL

DRAWN BY: RWM
DATE: 01/05/2011
SCALE: NTS
SHEET: 1 OF 1

DRAWING NUMBER: D-1-115